Operator's Manual

RC108, RC231/SPECIAL, RC281, RC301/401/501
Crate Washers

Australia Tel: 1300 347 944 | **New Zealand** Tel: 0800 902 054 | **Singapore** Tel: +65 9107 8943

INSTRUCTION MANUAL FOR DISHWASHERS

It is important to keep this instruction manual near the appliance for future consultation.
If the appliance is sold or transferred to another user, make sure this manual remains with the appliance so that the new owner is informed about the warnings and operation of the appliance. These instructions are given for safety reasons and they must be read carefully before installing or using the appliance.

GENERAL INSTRUCTIONS

- The appliance must be connected to water and electrical supplies by qualified tradespersons only and according to local regulations.
- The appliance must be used by adults only. Do not let children play with, or operate this machine.
- Only persons trained to use this dishwasher are permitted to operate it.
- This appliance has been designed to wash food preparation and eating utensils. It has NOT been designed to wash objects soiled with petrol, paint, remnants of steel or iron, corrosive chemical products such as acids, alkalis, or solvents or any item that cannot be immersed in water.
- Do not open the appliance door(s) while the appliance is operating. The appliance has a safety device which stops operation if a door is accidentally opened.
- After using the appliance, isolate the electric and water supply.
- Do not attempt to repair the appliance. Repairs made by unqualified persons may cause further damage and will void warranty.
- Repairs and servicing of this appliance must be carried out by Rhima personnel only.

IMPORTANT CUSTOMER INFORMATION

- To request a service, detergents or rinse additive contact your local Rhima Service centre below:

Australia:	**1300 347 944**
New Zealand:	**0800 902 054**
Singapore:	**+65 9107 8943**

ELECTRICAL INSTALLATION

This appliance must be connected to an earthed 3-phase electrical switched outlet of an appropriate rating.

PLUMBING INSTALLATION

The installation shall be in accordance with T*he Plumbing Code of Australia (PCA)*.

This appliance should be connected to a hot water supply *(Max 65°C)* in accordance with *Australian Standard AS/NZS 3500.1.* for optimum performance.

The incoming water supply must be maintained at a minimum dynamic pressure of 200 kPa *(29.0 psi)* and flow rate should be at least 15 litres per minute. Where the supply pressure is below 150 kPa, an installation of a rinse booster pump is recommended to ensure optimum rinse performance. If static pressure is higher than 600 kPa *(87.0 psi)* then a pressure reducing valve will be required upstream of the supply line *(not supplied)*.

Water hardness should not exceed 90 ppm; where this limit is exceeded, a suitably sized water softening system must be installed to prevent scale formation and maintain equipment efficiency. In locations where the incoming water quality contains elevated levels of sediment, chlorine & chlorides, organic contaminants, or other impurities, an installation of a pre-treatment carbon filtration system is recommended to improve water quality and protect the equipment from premature wear or operational issues.
(Any machine failures or damage caused to machine components due to poor water supply will not be covered under warranty)

IMPORTANT: ***Backflow prevention***

To comply with the *ABCB (Australian Building Codes Board) WMTS-101 WaterMark Technical Specification*, a suitable *WaterMark-Certified* external backflow prevention device, such as this dual check valve example explained below, MUST be installed:

- The installation can be vertical or horizontal.
- Make sure all lines are cleaned of any debris before commissioning.
- Connect to the incoming water supply valve **A** to the dual check valve **B** and then to the inlet hose **C** which connects to the washer **D**.
- Ensure that the dual check valve is installed in the correct flow direction. Refer to flow direction arrow on valve nameplate or body.

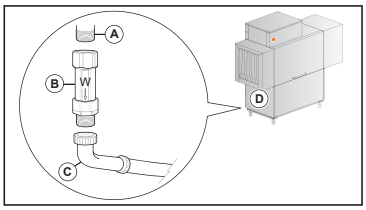

This appliance is designed to drain into a tundish or trap.
Waste connection to a spigot is not recommended and will cause draining issues.
The drainpipe should withstand 70°C (158°F) in continuous duty conditions.

The drain hose/pipe must have a fixed watertight seal above the tundish or trap in accordance with the Australian Standard AS/NZS 3500.2.

A DIAGRAM SHOWING THE CORRECT METHOD OF WASTE INSTALLATION IN ACCORDANCE WITH THE AUSTRALIAN STANDARD AS/NZS 3500.2

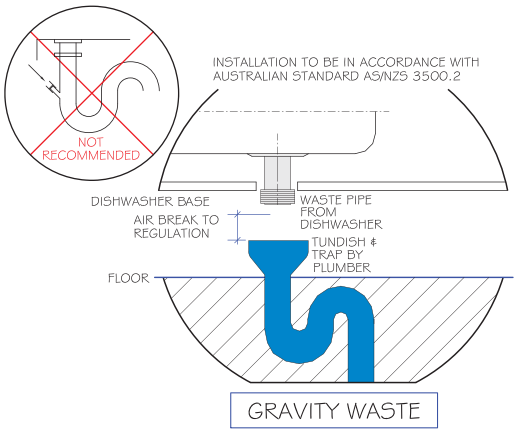

VENTILATION

Use extractor fans to guarantee a minimum ventilation of 500 m³/h. Increase the ventilation rate to 1500 m³/h if the machine is equipped with drying system. It is suggested to position the extractor fans close to the machine entry and exit and in correspondence to the heat recovery fans.

MACHINE DESCRIPTION

Description of the machine, its accessories and its guards

Machine description

Refer to annexes for the technical data of the machines.

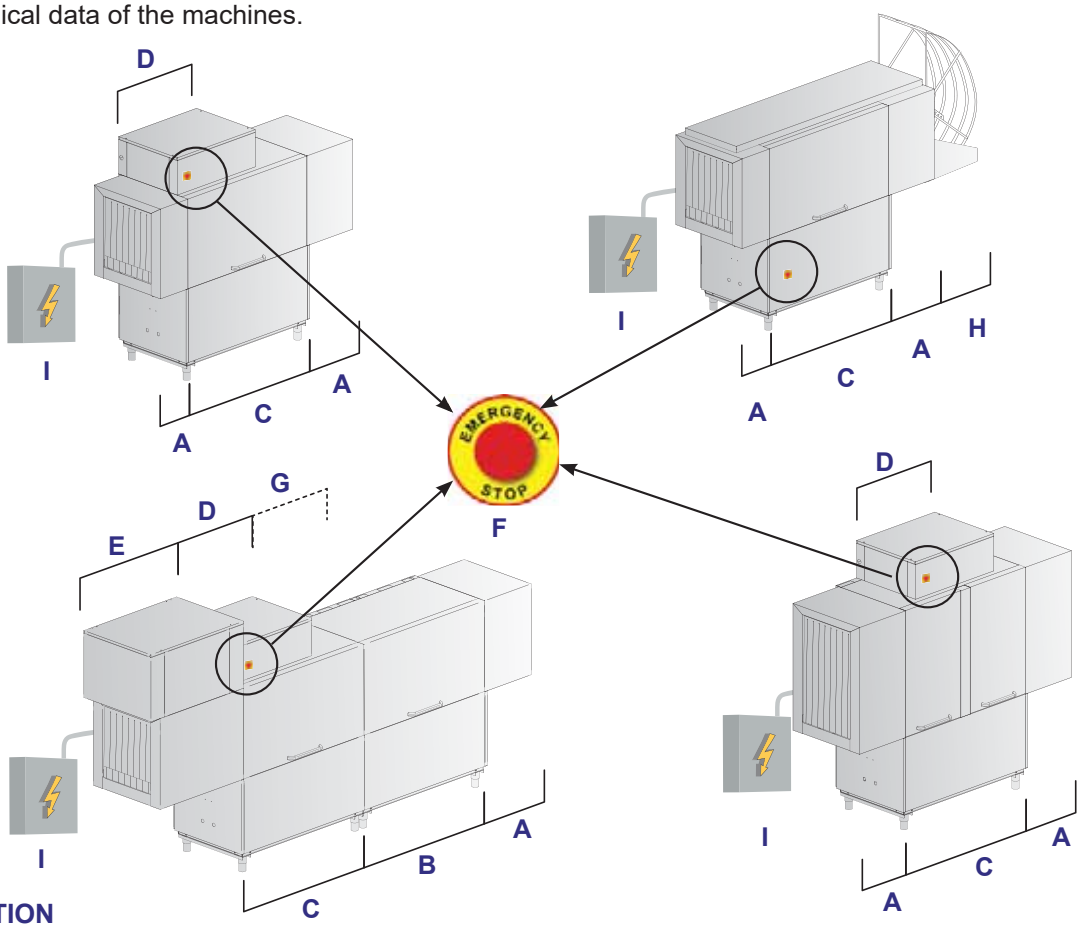

pict. 1

Example:
MACHINE IN RIGHT EXECUTION

A - SPLASH GUARD
B - PRE-WASH
C - WASH + RINSE
D - CONTROL PANEL
E - DRYER
F - EMERGENCY BUTTON
G - HEAT RECOVERY/STEAM CONDENSER/HEAT RECOVERY WITH HEAT PUMP
H - UPPER LOADING SYSTEM
I - WALL-MOUNTED CIRCUIT BOARD

Module	Dimension		
	Width	Height	Depth
A - SPLASH GUARD	300 mm	1520 mm 1820 mm (1)	900 mm
B - PRE-WASH	600 or 900 mm		
C - WASH + RINSE	1300 mm		
D - CONTROL PANEL	850 mm	1830 mm 2130 mm (1)	
E - DRYER	900 mm (1000 mm)	2070 mm 2370 mm (1)	
G - HEAT RECOVERY/STEAM CONDENSER	450 mm o 1300 mm	1860 mm 2160 mm (1)	
G - HEAT RECOVERY WITH HEAT PUMP	1000 mm	2070 mm	
H - UPPER LOADING SYSTEM	610 mm	2090 mm	
(1) Special model for high baskets			

This machine is built with high quality materials in particular AISI 304 stainless steel (AISI 316 for boilers and tanks) with a wall thickness to ensure a long lifetime.

Pre-wash module (the presence depends on the model chosen): a preliminary washing is carried out with low temperature thermostatically controlled to melt the alimentary residuals and avoid the proteins denaturation.

Wash module: a proper washing of the baskets is performed with temperature thermostatically controlled.

Rinse module: a pre-rinse is performed that removes most of the detergent, then a final rinse is performed with high temperature thermostatically controlled.

Autotimer: the Autotimer function (activated by default) allows stopping the machine if it is in start-mode but not operating at the moment.
It can happen in two cases:
1. The machine is working in vain (it is in operation but it is not used).
2. The machine is in operation but a basket accumulation exiting the machine causes the limit switch SQ1 to trip (F1).

In these cases, the timer set by default at 300 seconds trips.

By inserting a basket or clearing the exit the machine restarts automatically to operate.

Available options

Dryer E:
It conveys hot and dry air that creates the ideal conditions for rapid drying.
The dryer heating can be turned on or off by the operator.

Stage dryer E:
An air knife removes the water from the basket, by using a narrow focused stream of air.

Heat recovery G:
The goal is the recovery of the steam heat exiting the machine that otherwise would be dispersed, and use it to pre-heat the water entering the boiler.
The machine must have a cold water supply for the rinse.

Heat recovery with heat pump G:
The goal is the recovery of the steam heat exiting the machine that otherwise would be dispersed, and use it to pre-heat the water entering the boiler.
It exploits a heat pump to further increase the water temperature entering the boiler.
The machine must have a cold water supply for the rinse.
WARNING: If this optional is present the **Autotimer** must be set to a minimum value of 300 seconds.

WARNING: Heat Recovery system and Steam Condenser - installation (optional)

It is strictly forbidden to connect the machine's vent directly with the outdoor!

Cold weather conditions might seriously damage the Thermal Recovery system or the Steam Condenser.

Upper loading system H

Pressure Increase Pump:
It allows a proper machine operation when the feeding water pressure of the machine is lower than 200 kPa.

Inverter:
It allows adjusting the speed of the conveyor in 5 steps and reaching the DIN speed.

CONTROL PANEL AND RELATED SYMBOLS - Display 1

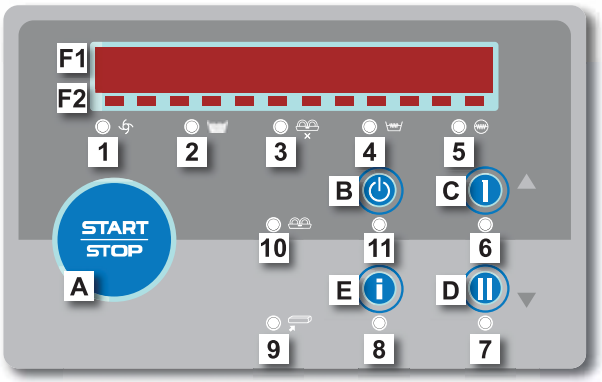

A: START / STOP key. Function key.

B: ON / OFF key.

C and D: Scrolling keys (**▼ / ▲, - / +**).

E: INFO key.

F1: Display with scrolling text

F2: Scrolling LEDs bar

MACHINE IN STAND-BY - Display 2

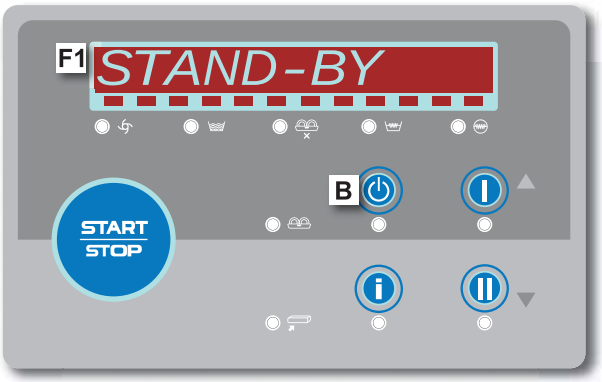

B: ON / OFF key with **ON** function.
To turn the machine ON.

F1: Display with scrolling text: provides information about the current status of the machine.

MACHINE READY OR IN OPERATION - Display 3

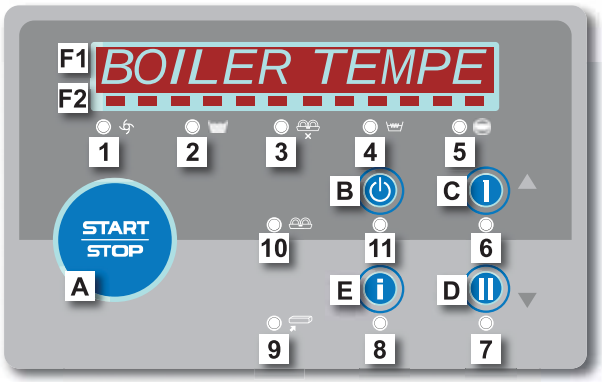

A: START / STOP key.
When the machine is ready, it allows the start. The conveyor is activated by pressing this key.
When the machine is running, allows stopping and putting in ready mode. The conveyor is stopped by pressing this key.

B: ON / OFF key with **OFF** function.
Allows putting the machine in **STAND-BY** mode.

C and D: Scrolling keys (**▼ / ▲, - / +**)
When in the menu either scrolls the items or modifies all adjustable parameter (increase and/or decrease).
When the machine is ready or running: to adjust the conveyor speed.

E: INFO key.
It provides additional information about:
Boiler temperature
Tank temperature
Prewash temperature (if present)
Date
Hour
Factory code
Installed firmware.
It's possible scrolling the menu items by using the **C** and **D** keys.

F1: Display with scrolling text. Provides information about the status of the machine, temperatures and other indications. Some messages are displayed alternatively to temperatures. See chapters **5** and **12** for more information.

F2: Scrolling LEDs bar.
One LED lit: indicate the machine is ON and in operation.
Series of LED lit: indicate the time remaining to the energy saving mode activation. See paragraphs **Autotimer** ***(Page 5)*** for more information.

LIGHTS (see paragraph **Display 1** ***(Previous page)***).

1: Flashing green: machine ON and in operation.
Still green: machine ON in energy saving mode (see paragraph **Autotimer** ***(Page 5)***)

2: Green: tanks filled.

3: Yellow: baskets limit switch activated.

4: Yellow: tank heating activated.

5: Still yellow: boiler heating activated.
Flashing yellow: intermittent boiler heating activated.

6: Green: lower speed selection.

7: Green: higher speed selection.
Both **6** and **7** lights are OFF when the machine is equipped with the optional INVERTER and an intermediate speed is selected.

8: Green: **INFO** Menu

9: Unused

10: Green: clear inlet for basket (for models with pre-wash on corner only)

11: Green: machine ON.
Still red: machine in stand-by mode
Flashing red: alarm

FUNCTIONING OF THE MACHINE

Machine start-up

- Check that the overflow pipes are correctly inserted
- Turn on the wall-mounted main switch**.** See section **MACHINE DESCRIPTION** ***(Page 4)***
- Open the water supply valves.
- Turn on the machine using the control panel.
- Wait for the filling operations to be completed.
  Once filling of all the tanks is finished, the heating of the machine starts. In this phase the display shows the message **HEATING** alternatively to temperatures.
- When heating is finished, the display shows the message **READY TO START** alternatively the wash/rinse temperatures. To ensure proper washing, start the operations after the display shows the message **READY TO START.**

Washing

- To set the desired working speed, use keys **D ▼** (decrease) and **C ▲** (increase) to set a suitable speed for the type of work to be carried out.
  There are two possible settings:
  Speed 1: minimum. (optimal cleaning results)
  Speed 2: maximum. (maximum throughput)
  If the machine is equipped with the optional **INVERTER**, there are five possible settings.
- If the machine is not equipped with an automatic chemicals dispenser, manually introduce the detergent in the wash tank. See section **DETERGENTS** ***(Page 9)***).
- Press **START / STOP A** button to start the conveyor movement.
- Place the baskets on the conveyor (see paragraph **Basket loading** ***(Next page)*** - pict. 3 & 4).
  Push the basket inside the splash guard **A** until engaged with the towing system.
  The washing sequence is the following:
  ►Low temperature pre-wash (**B** - if there is).
  ►Thermostatically controlled temperature wash **C,** followed by a pre-rinse.
  ►Final rinse **C** carried out with clean water coming from the hydric network and thermostatically controlled and eventually rinse aid.
  ►Drying (**E** - if there is the optional module).
  ►Baskets exit zone equipped with roller conveyor and limit switch.
- Push the **START / STOP A**, button to stop the operation.

N.B.: It is recommended to drain and change the tank's water when very dirty or, at least, twice a day.

WARNING: In case a dangerous situation occurs, push the emergency button **F**. The towing system, pumps and heaters turn off. Before restarting the appliance, check if the emergency is over. The emergency button rearmament does not start the machine but it position the appliance in stand-by. The emergency button should not be used as usual machine switch off system.

It is forbidden to remove the basket from the machine before it has come out of the tunnel and to insert hands or arms inside the machine when it is in movement (see pict. 2).

Note: Always turn the machine off before inserting your hands or arms inside the tunnel.

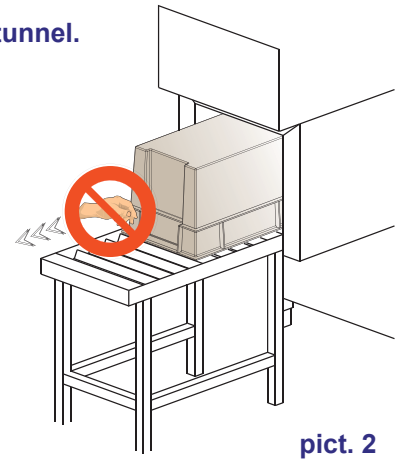

pict. 2

End washing operations

- Press **START / STOP A** key.
- Press key **ON/OFF B**.
- Drain the tanks.
  Open the doors and remove filters and overflows.
- Turn off the wall-mounted main switch **I**.
- Shut the water supply valve(s).
- Start the cleaning of the machine (see chap. **MAINTENANCE** ***(Page 10)***).

Baskets loading

Before loading the baskets it is necessary to carry out a proper cleaning off of the food residuals.

Follow these tips:

- Baskets must not lie inside one another, or be covering each other.
- Place the baskets so that all the surfaces can be reached by the water; otherwise the baskets cannot be washed properly.
- Make sure that the baskets are placed in a stable position and that they do not turn upside down.
- Place the baskets **upside down** for washing.

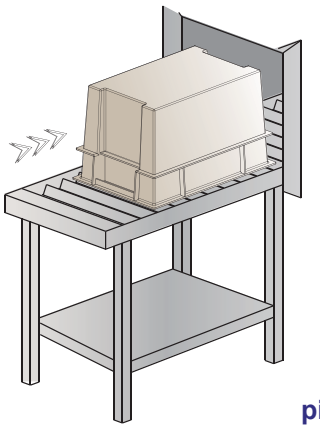

pict. 3

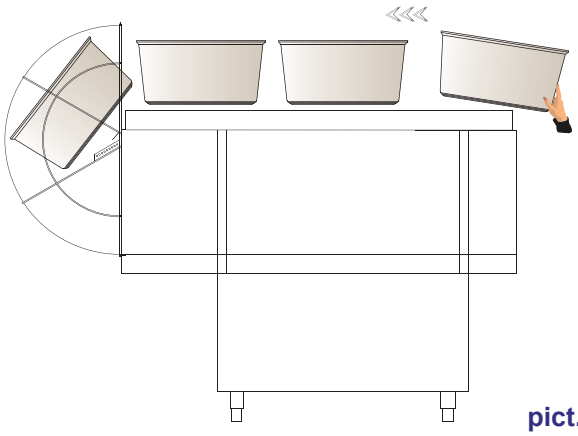

pict. 4

Some food, like carrots, tomatoes, ketchup, may contain natural colorant substances that may alter the baskets and plastic parts if they are in large quantity.

The eventual color alteration does not mean that the plastic is not thermo-resistant.

Items not suitable to be washed in a dishwasher:

- Wooden baskets or with wooden parts; wood wraps and loses its characteristics if it is exposed to high temperatures. In addition the glues used are not suitable for dishwashers.
- Plastic baskets not thermo-resistant.

It is suggested to purchase only baskets suitable for washing in dishwashers.

The washing and drying effectiveness is determined by the baskets conformation. A basket with smooth and linear surfaces, without any ribs and hollows where washing water could stand, gives the best drying results.

If after the washing the baskets are not clean or they have washing residuals it is mandatory to repeat the procedure.

If the machine is equipped with an upper loading system, do not to push forcefully the baskets on the machine, as they must be gently placed and accompanied.

If the machine is equipped with an upper loading system, the baskets must be loaded one by one. Entering into the machine the baskets have to hook the basket runners properly (see pict. 5).
Basket dimensions:
Maximum width 500 mm - Minimum width 450 mm
Maximum height 500 mm or 800 mm (depends on the model chosen)
Maximum lenght 800 m

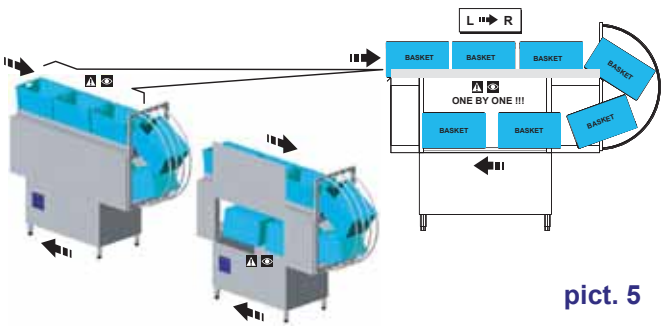

pict. 5

WARNINGS:

- Do not slam the doors when opening and closing.
- Do not put material or objects on top of the machine.
- The water used for the washing and the rinsing is not potable because of the presence of chemical additives. In case of contact with skin or eyes wash them immediately with plenty of water and check the safety instructions of the detergent manufacturer. If necessary, contact a doctor.
- Some important rules must be followed for the use of this appliance:
  1) Never touch the appliance with wet hands or feet
  2) Never use the appliance when barefooted
  3) Do not install the appliance in places exposed to water splashes.
- **This machine must be disconnected from the main electrical supply after use at the end of the day and for any service/maintenance operation. Switch off the main switch located on the wall, which shall be installed by a professional installer. Shut the water supply valve(s).**
- In case a crate or bin becomes stuck, first switch off the wall-mounted main switch and then remove the cause of the block.

WARNING: INTERNAL CLEANING OF THE MACHINE SHALL BE CARRIED OUT AT LEAST 10 MINUTES AFTER IT HAS BEEN TURNED OFF.

WARNING: DO NOT INSERT HANDS AND/OR TOUCH THE PARTS LOCATED AT THE BOTTOM OF THE WASH TANK AND/OR AT THE END OF THE WASH CYCLE.

WARNING: DO NOT TOUCH THE CONVEYOR WHILE IT IS WORKING.

DETERGENTS

Using detergent

The detergent must be of good quality, of NON-FOAMING type, specific for use in automatic washing equipment.
The use of liquid detergents is recommended.
The dosing has to be done following the recommendations of the detergent manufacturer and in accordance with the water and baskets characteristics.
The detergent has to be inserted only in the wash tank 1. For manual dosing remember that the wash tank contains about 85 litres of water.

Note: It is highly recommended NOT to use detergents with chlorine-based reagents as they may damage stainless steel components including heater elements.

Using rinse aid

It is possible to use the rinse aid to get quicker drying.

The dosing has to be done following the recommendations of the rinse aid manufacturer and in accordance with the water characteristics.
Note: too much chemicals produces foam that reduces the effectiveness and lifetime of the washing pump.
Too much chemicals might leave residuals on the baskets.

OBSERVANCE OF THE RULES OF HYGIENE AND H.A.C.C.P.

In order to meet the correct H.A.C.C.P. procedures remember to prepare a sheet with tables where the shift operator enters the date and time the washing starts, the time the washing ends, the tanks and boilers temperatures and any other note/alarms that have tripped and what he/she has done to ensure sanitary safety.

This is the reason why the machine is equipped with:

- Temperature gauges that indicate the boiler and tank temperature.
- Malfunctioning gauges.
- Possibility to consult the washing parameters.

MAINTENANCE

WARNING: The machine including the electrical cabinet is not protected against pressure water jets, therefore avoid the use of this type of cleaning.

It is also suggested to contact cleaning product dealers for detailed information about methods and products for a periodical sanitizing of the machine.

Do not use bleach or chlorine-based detergents to clean the machine.

Regular maintenance

The perfect operation of the machine **depends on a careful cleaning that is necessary at least once a day** with the following procedure:

- Turn off the machine as explained in the paragraph **End washing operations** ***(Page 8)***.
- If the machine is equipped with Heat Recovery with the heat pump clean the extractable filter (see pict. 8).
- With empty tank, extract the filters of the tanks and the pumps (see pict. 6 & 7). Be careful that the washing residuals in the filters do not fall in the tanks. Clean the filters with a rigid brush underneath a powerful water jet.

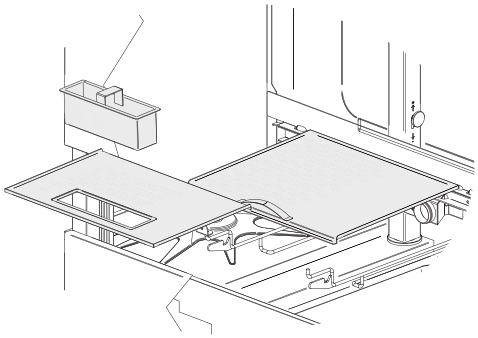

pict. 6

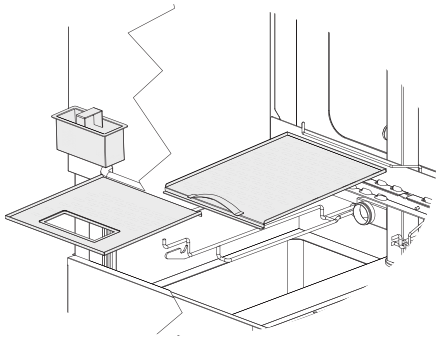

pict. 7

- Extract the wash and the rinse arms (see pict. 9) and carefully clean the nozzles and the dome filters of the rinse nozzles underneath running water.
- Carefully clean the tanks avoiding the use of chlorine-based detergents.
- Clean the shutters (long on the outside, short on the inside).
- Clean the entry and exit shelves.
- Reassemble all the parts and replace the arms in their seats.
- It is suggested to leave the doors of the machine open at the end of the day.

Do not use a metal scouring pad and/or corrosive products to clean the dishwasher.

Do not use pressure cleaning systems.

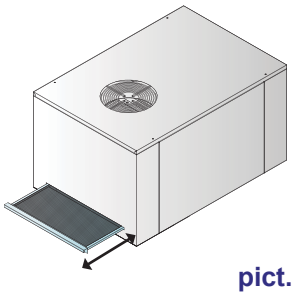

pict. 8

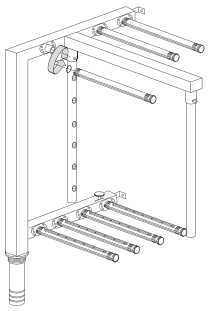

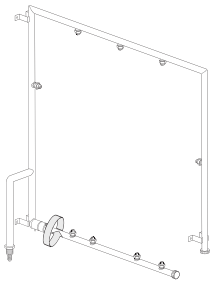

pict. 9

Special Maintenance – by qualified Service Personnel only

Once or twice per year, the machine should be checked by qualified Service Personnel:

- Remove scaling from the heating elements
- Check the status and the tightness of all gaskets
- Check the perfect state and/or wear of the components
- Check the efficiency of the dispensers
- Tighten firmly all electrical connections at least once per year
- Clean the intake filter of the solenoid valve
- Check the state of the safety devices of the doors/boilers, limit switches
- Check the calibration of the clutch.

Pay attention to not wet the motor or any electric part. Perform maintenance with the wall-mounted main switch turned OFF.

Special Maintenance - Heat Recovery with heat pump optional

Every two months the Heat Recovery should be checked by qualified Service Personnel to:

- Clean the finned exchangers inside the Heat Recovery.
- Check the heat pump's flow is properly charged.

Special Maintenance - Heat Recovery

Every three months the Heat Recovery should be checked by qualified Service Personnel to:

- Clean the finned exchanger inside the Heat Recovery.

ENVIRONMENTAL ASPECTS

Packing

The packing consists of the following:

- a wooden crate;
- extensible belt in nylon (LDPE);
- polystyrene foam (PS).

Please dispose of the materials listed above, according to the current regulations.

Disposal

pict. 10

The symbol WEEE used on this product indicates that it cannot be treated as domestic waste. Proper disposal of this product contributes to protecting the environment. For more information on product recycling, contact the local authorities, domestic waste authorities or the shop where the product was purchased.
For product or part disposal, follow the Council directives 2011/65/EU and 2012/19/EU as amended and/or application legislative decrees.
The present product or parts can not be disposed of as urban waste but shall be collected in separate containers (see the waste bin on wheels symbol - pict. 10 - with an "X" on the product).
At the time of product disposal, the user shall refer to the waste electrical and electronic equipment (WEEE) specification.

The manufacturer guarantees the absence of dangerous substances in the EEA used in conformity to the directive 2011/65/EU.
If the user does not comply with the regulations he/she shall be subject to the penalties foreseen by each member state.
Disconnect electricity and water before disposal.
Cut the electrical cable to ensure that further use is impossible.
All metal parts are recyclable as they are made of stainless steel.
Recyclable plastic parts are marked with the plastic material symbol.

ECOLOGICAL ASPECTS

Recommendations for optimum use of energy, water and additives

If possible, use the machine at full load: This will avoid wasting detergent, rinse aid, water and energy.

Detergents and rinse aids: Use detergents and rinse aids having the highest biodegradability so that the environment is better respected. Have the correct dosage according to the water hardness checked at least once a year. An excess of product pollutes rivers and seas, whereas an insufficient amount compromises basket washing and/or hygiene.

Tank and boiler temperatures: The temperatures of the tank and boiler are set by the manufacturer so as to get the best washing results with the majority of detergents on the market. These can be reset by the installer according to the detergent used.

Cleaning off: Carefully clean off the baskets using water at ambient temperature with moderation so as to make removal of animal fats easier. To remove encrusted matter, soaking in hot water is recommended.

Notes: Wash the objects as soon as possible in order to prevent the deposits from drying and jeopardizing the effectiveness of the washing. To get an efficient wash, it is advisable to regularly clean and maintain the dishwasher (see par. **MAINTENANCE** ***(Page 10)***).

Non-compliance with the above points and all the information described in this manual could determine a waste of energy, water and detergent, with consequent increase in operating costs and/or decrease in performance.

SIGNALS AND ALARMS - Display 4

During the operation, the machine visualises the current status of the machine, the alarms and other situations that need the operator attention.

Example: machine ready to start display notification:

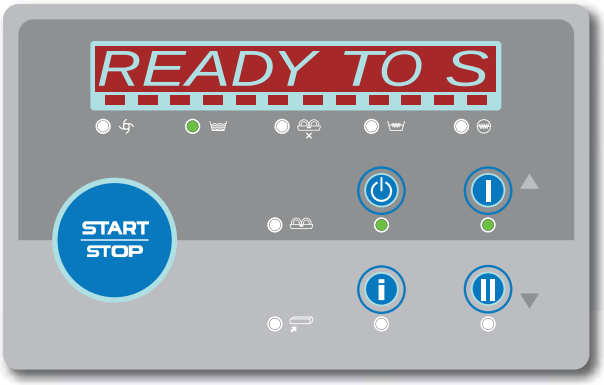

Signals - Display 5

The signal messages are displayed and signalized with a beep.

When **DETERGENT LEVEL** appears on the display it means that the detergent is empty.

When **RINSE-AID LEVEL** appears on the display it means that the rinse aid is empty.

When **DOOR OPEN** appears on the display it means that you are trying an operation that cannot be done with the door opened or that you opened the door and interrupted a cycle in progress.

When **DRAIN THE TANKS** appears on the display it means that you are trying an operation that cannot be done with the tanks full.

When **FREE THE OUTLET** appears on the display it means that it is necessary to remove the baskets from the exiting shelf to continue the operation.

When **HEAT PUMP MAINTENANCE** appears on the display it means that you must call a technician for the Heat Recovery with heat pump maintenance (see par. **Special Maintenance - Heat Recovery** ***(Page 11)*** - only if the machine is equipped with the optional).

Signal screen example:

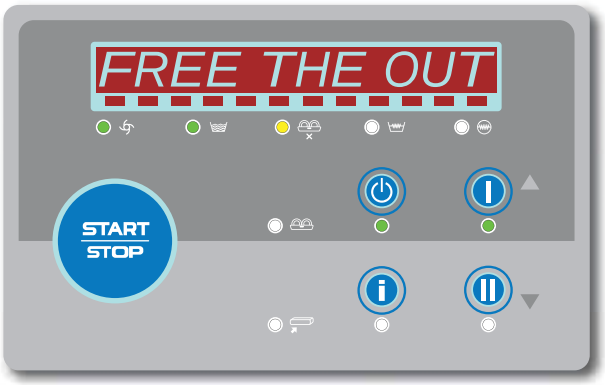

Alarms - Display 6

The alarms are displayed with an alphanumeric code followed by a brief description.

Alarm screen example:

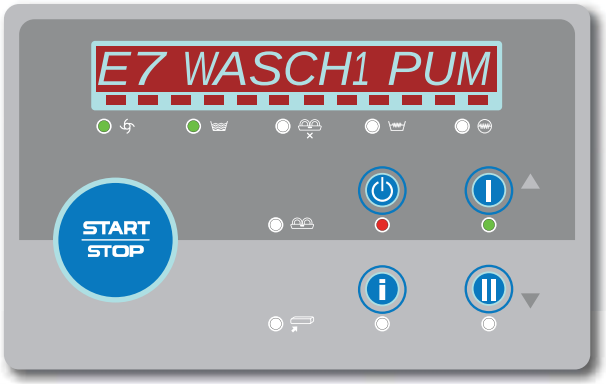

Alarms description

ALARM	ALARM DESCRIPTION	REMEDIES
B2	BOILER 1 PROBE FAILURE	Rated temperature cannot be reached. It's recommended to suspend the washing. Contact the Rhima Service Department.
B3	BOILER 1 HEATING FAILURE	Please turn **OFF** the appliance, by pressing the **ON/OFF B** button, and turn it **ON** again, after a few seconds. Should the alarm persist, please contact the Rhima Service Department.
B5	BOILER 1 OVERTEMPERATURE	It is recommended to turn **OFF** the appliance and contact the Rhima Service Department.
B10	RINSE LOW TEMPERATURE	Please make sure that rinse arms and nozzles are in the right position. Should the alarm persist, please contact the Rhima Service Department.
E1	WASH TANKS FILLING FAILURE	Please check that water inlet connection is working. Please turn **OFF** the appliance, by pressing the **ON/OFF B** button, and turn it **ON** again, after a few seconds. Should the alarm persist, please contact the Rhima Service Department.
E2	WASH1 PROBE FAILURE	Washing results may be affected. Please contact the Rhima Service Department.
E3	WASH1 HEATING FAILURE	Please turn **OFF** the appliance, by pressing the **ON/OFF B** button, and turn it **ON** again, after a few seconds. Should the alarm persist, please contact the Rhima Service Department.
E5	WASH1 OVERTEMPERATURE	It is recommended to turn **OFF** the appliance and contact the Rhima Service Department.
E7	WASH1 PUMP THERMAL PROTECTION	It's recommended to suspend the washing. Please contact the Rhima Service Department.
M1	PREWASH FILLING FAILURE	Please check that water inlet connection is working. Please turn **OFF** the appliance, by pressing the **ON/OFF B** button, and turn it **ON** again, after a few seconds. Should the alarm persist, please contact the Rhima Service Department.
M2	PREWASH PROBE FAILURE	Washing results may be affected. Please contact the Rhima Service Department.
M3	PREWASH COOLING FAILURE	Please check that the cold water inlet connection is working. Please turn **OFF** the appliance, by pressing the **ON/OFF B** button, and turn it **ON** again, after a few seconds. Should the alarm persist, please contact the Rhima Service Department.
M7	PREWASH PUMP THERMAL PROT.	Washing results may be affected. Please contact the Rhima Service Department.
U10	OPTIONAL MOTORS THERMAL PROT.	Please contact the Rhima Service Department.
W1	THERMAL PROTECTION	Please contact the Rhima Service Department.
Z8	GENERAL ALARM	Emergency button pressed. Make sure that the emergency is solved. To resume working, release the emergency button. **WARNING:** the emergency button should not be used as ordinary mean to turn the appliance **ON/OFF**.
Z17	RINSE WATER SUPPLY FAILURE	Please check if the water supply is working and make sure that rinse arms and nozzles are in the proper position. Please turn **OFF** the appliance, by pressing the **ON/OFF B** button, and turn it **ON** again, after a few seconds. Should the alarm persist, please contact the Rhima Service Department.

MACHINE PROBLEMS, CAUSES AND CURES

Type of Problem	Possible Causes	Cure
The machine does not load water	Water supply tap is closed	Open the water supply tap
	Shortage of supply water pressure	Turn off and turn back on when the pressure increases or install a booster pump
	Solenoid valve filter blocked	Contact the Rhima Service Department
Unsatisfactory washing results	The washing nozzles are clogged	Clean the nozzles and correctly reposition the arms in the proper seats
	Detergent consentration too low	Change the dosage of detergent
	Filters too dirty	Remove and clean the filters with a brush under running water, then replace them in their seats
	Presence of foam	Always use a non-foaming detergent. Check the detergent and rinse-aid dosages and reduce them if necessary
	Check the tank temperature (Which must be between 50°C and 60°C)	Contact the Rhima Service Department
	Length of washing cycle inadequate for the type of grime build-up	Choose a longer cycle if possible, otherwise repeat the wash cycle
	Washing water too dirty	Drain the water in the tanks, clean the filters. Reload the tank and replace the filters properly.
The objects are not dried properly	Insufficient rinse-aid dosage	Increase the amount of rinse-aid. Contact the Rhima Service Department.
	Rinse water temperature under 80°C	Check the temperature of the water entering the system.
Streaks or smears on the objects	Rinse-aid concentration too high	Always use a non-foaming detergent. Check the detergent and rinse-aid dosages and reduce them if necessary. Contact the Rhima Service Department.
During wash cycle the machine stops and draws water	Check overflow/drain pipe is correctly seated and/or seal is not damaged	Remove and correctly reposition the overflow/drain pipe. Replace seal if required.
	Faulty water level switch	Contact the Rhima Service Department
	A tank emptied due to excess of foam or lack of curtains/splash guards	Reduce the concentration of rinse-aid/detergent or correctly reposition the curtains or the other guards that may have been removed.
	Wash arms incorrectly positioned	Check and correctly reposition the wash arms.
During wash cycle the machine stops	Check the exit conveyor (If fitted) is not full of crates/baskets	Empty exit conveyor.
The machine does not wash and the pump is noisy on machines with three-phase pump	The pump direction is inverted due to incorrect connection of the power supply cable	Contact the Rhima Service Department
	The level of water inside the tank is too low	Remove and correctly replace the overflow pipe
		Correctly reposition the curtains or the other guards that may have been removed.
		Check and correctly reposition the wash arms.
		If the level of water continues to fall, contact the Rhima Service Department
	The suction of the pump is clogged	Check if the suction filters of the pump (placed in the tanks) are clogged. If the problem persists contact the Rhima Service Department.

OPTIONALS PROBLEMS, CAUSES AND CURES *(if fitted)*

Heat recovery with heat pump

Type of Problem	Possible Causes	Cure
Compressor attach/detach	Safety pressure switches intervention	Contact the Rhima Service Department
	Water temperature supply too high	Varify the water temperature supply
	Water capacity not sufficient	Varify the static pressure of water supply
	Dirty steam coil	Clean the filter. Should the alarm persists, please contact the Rhima Service Department to clean the Heat Recovery.
Low boiler temperature	Dirty steam coil	Clean the filter. Should the alarm persists, please contact the Rhima Service Department to clean the Heat Recovery.
	Heat pump has lost gas	Contact the Rhima Service Department
	The Heat Recovery has been switched OFF and then switched ON.	Wait a couple of minutes to restart the compressor and that the boiler temperature is restored.
	Safety pressure switches intervention	Contact the Rhima Service Department
The objects are not dried properly	Insufficient rinse-aid dosage	Verify the rinse-aid dosage and increase it, if needed.
	Dirty steam coil	Clean the filter. Should the alarm persists, please contact the Rhima Service Department to clean the Heat Recovery unit.
	Heat pump has lost gas	Contact the Rhima Service Department

Heat Recovery

Type of Problem	Possible Causes	Cure
Low boiler temperature	Dirty steam coil	Should the alarm persist, please contact the Rhima Service Department to clean the Heat Recovery.
	The ventilation motor is damaged	Contact the Rhima Service Department
The objects are not dried properly	Insufficient rinse-aid dosage	Verify the rinse-aid dosage and increase it, if needed.
	Dirty steam coil	Should the alarm persist, please contact the Rhima Service Department to clean the Heat Recovery.

Dryer

Type of Problem	Possible Causes	Cure
The objects are not dried properly	Cold air is emitted	Contact the Rhima Service Department
	The fan direction in inverted due to incorrect power cable connection	Contact the Rhima Service Department

Australia Tel: 1300 347 944
New Zealand Tel: 0800 902 054
Singapore Tel: +65 9107 8943

Version 1.2

DETERGENTS

To request detergents or rinse additive contact your local Rhima Service centre below:

Australia: **1300 347 944**
New Zealand: **0800 902 054**
Singapore: **+65 9107 8943**

Superwash

10L Drum